Howard County Health Department

Bureau of Environmental Health
8930 Stanford Boulevard, Columbia, MD 21045
Main: 410-313-2640 | Fax: 410-313-2648
TDD 410-313-2323 | Toll Free 1-866-313-6300
www.hchealth.org
Facebook: www.facebook.com/hocohealth

Maura J. Rossman, M.D., Health Officer

RECEIPT DATE: 3/28/19 **ONSITE SEWAGE DISPOSAL SYSTEM** P 564879

APPROVAL DATE: 04/02/2019 **PERMIT: CONSTRUCTION** A

PROPERTY ADDRESS: 14510 OLD FREDERICK ROAD, COOKSVILLE, MD 21723

SUBDIVISION: QUARTZ HILL III LOT: 1 TAX ID: 04-596400

CONTRACTOR: WTC CONTRACTORS EMAIL: —

CONTRACTOR ADDRESS: 3033 Salem Bottom Road, Westminster, MD 21157 PHONE: 410-458-7024

PROPERTY OWNER: CATONSVILLE HOMES LLC EMAIL: pwalter@catonsvillehomes.com

OWNER ADDRESS: 11175 STRATFIELD CT, MARRIOTTSVILLE, MD 21104 PHONE: (410)442-2215

SEPTIC TANK SIZE (GALLONS): 2000 TANK MANUFACTURER: ~~TBD~~ BABYLON

PUMP MODEL: n.a. PUMP SIZE n.a. PUMP TANK CAPACITY: n.a.

DISTRIBUTION SYSTEM: ☒ GRAVITY ☐ PRESSURE DOSED BEDROOMS: 5 APPLICATION RATE: 0.6

TRENCHES:	LINEAR FEET REQUIRED: 209	INLET DEPTH:	3.0
	TRENCH WIDTH: 3	MAXIMUM BOTTOM DEPTH:	8.0
	MINIMUM SPACE BETWEEN TRENCHES: 13	EFFECTIVE AREA BEGINNING DEPTH:	5.0
LOCATION:	PER APPROVED SITE PLAN. SEWAGE DISPOSAL AREA AND TANK LOCATIONS MUST BE STAKED BY LICENSED SURVEYOR PRIOR TO PRE-CONSTRUCTION INSPECTION.		
NOTES:	4x 53' TRENCHES		

ISSUED BY: R BRICKER ISSUE DATE: 3/28/19 EXPIRATION DATE: 3/28/20

NOTE: CONTRACTOR MUST SCHEDULE A PRE-CONSTRUCTION INSPECTION PRIOR TO BEGINNING ANY INSTALLATION

NOTE: CONTRACTOR MUST SCHEDULE AN INSPECTION AND GAIN APPROVAL OF ALL COMPONENTS PRIOR TO COVERING

NOTE: STONE MUST BE APPROVED BY HEALTH DEPARTMENT AND GRAVEL TICKET MUST BE AVAILABLE FOR REVIEW.

NOTE: WATERTIGHT TANKS REQUIRED

NOTE: ALL PARTS OF SEPTIC SYSTEM SHALL BE AT LEAST 100 FEET DOWNGRADIENT FROM ANY WATER WELL

NOTE: MANHOLE RISERS REQUIRED ON ALL SEPTIC TANKS AND PUMP CHAMBERS

NOTE: AN ELECTRICAL PERMIT IS REQUIRED FOR INSTALLATION OF ANY ELECTRICAL COMPONENTS OF THE SYSTEM

☐ *ELECTRICAL PERMIT ISSUED* E n.a.

NOTE: MDE RECOMMENDS SEPTIC TANKS, BAT, AND OTHER PRETREATMENT UNITS BE PUMPED AT A FREQUENCY ADEQUATE TO ENSURE THAT SOLIDS ARE NOT DISCHARGED TO THE DISPOSAL AREA

NEITHER THE HOWARD COUNTY COUNCIL NOR THE HEALTH DEPARTMENT IS RESPONSIBLE FOR THE SUCCESSFUL OPERATION OF ANY SYSTEM.

PERMITTEE RESPONSIBLE FOR OBTAINING FINAL APPROVAL ON THIS PERMIT.

CALL 410-313-1771 TO SCHEDULE INSPECTIONS.

NOT TO SCALE

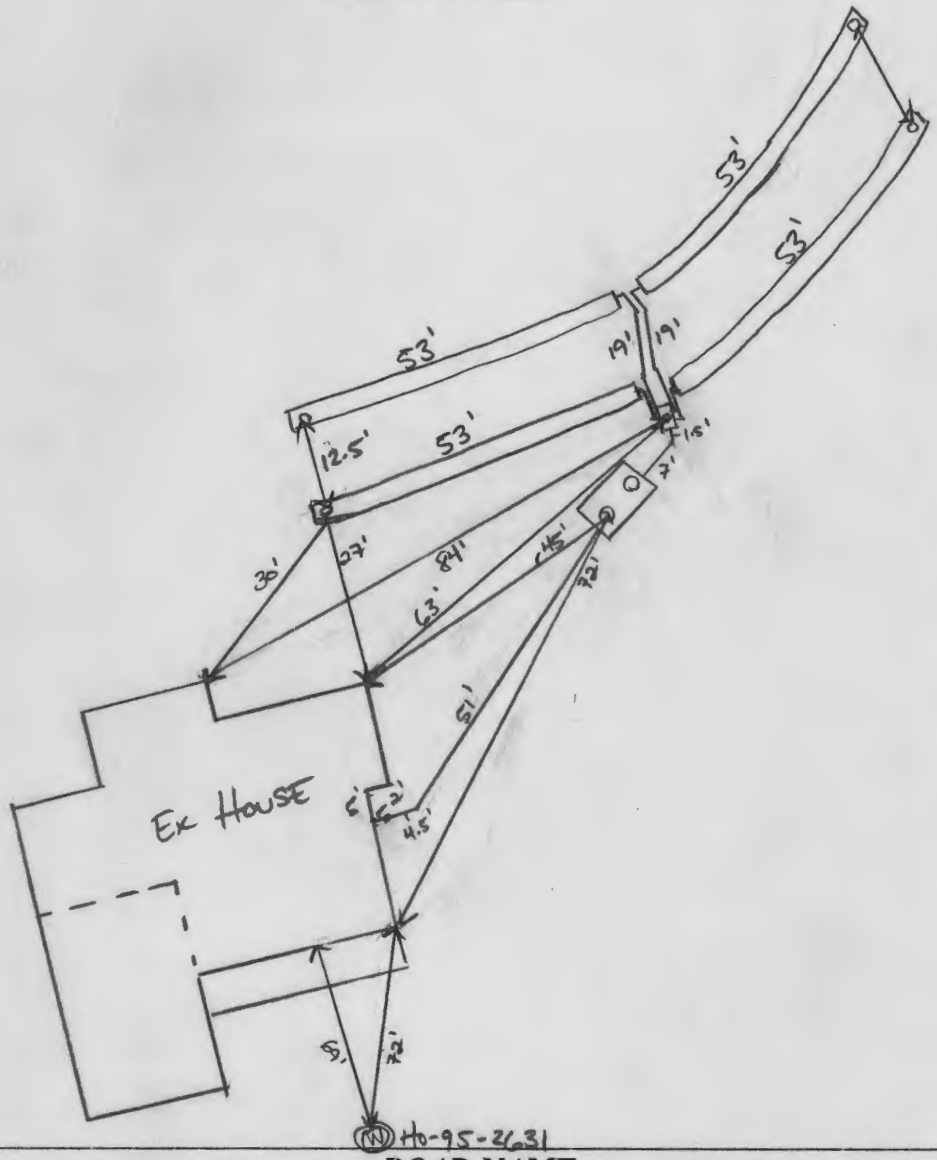

ROAD NAME

SHARED DRIVE OFF OF OLD FREDERICK RD

TRENCH/DRAINFIELD DATA

WIDTH	INLET	BOTTOM
3'	3'	8'

NUMBER OF TRENCHES 4

TOTAL LENGTH 212 ft

ABSORPTION AREA 636 ft²

DISTRIBUTION BOX LEVEL YES

DISTRIBUTION BOX BAFFLE YES

DISTRIBUTION BOX PORT YES

SEPTIC TANK DATA

SEPTIC TANK 1 LEVEL _____

MANUFACTURER BABYLON

CAPACITY 2000 GAL

SEAM LOC SP

TANK LID DEPTH _____

BAFFLES YES

BAFFLE FILTER NO

MANHOLE LOC FRONT/BACK

6" PORT LOC INLET

WATERTIGHT TEST N/A

SLOTTED YES

DATE ON LID 02/19/2019

PUMP/SEPTIC TANK LEVEL _____

MANUFACTURER _____

CAPACITY _____ GAL

SEAM LOC _____

TANK LID DEPTH _____

BAFFLES _____

BAFFLE FILTER _____

MANHOLE LOC _____

6" PORT LOC _____

WATERTIGHT TEST _____

SLOTTED _____

DATE ON LID _____

PRE-CONSTRUCTION:
3/28/2019 PAINTED TANK LOCATION. CONFIRMED FALL FROM HOUSE (House) BASEMENT FLOOR. CHECKED CONTOUR AND CONFIRMED PROXIMAL TRENCHES. OK TO START. RELAYOUT DISTAL TRENCHES (R)
4/1/2019 CONFIRMED CONTOUR AND PLACEMENT OF DISTAL TRENCHES. OK TO START. (R)

INSTALLATION: 3/29/2019 SHC INSTALLED. 4" SCH 40 PVC LINE FROM HOUSE INSTALLED INTO SEPTIC TANK. TANK SET. D BOX PLACED AND CONNECTED INTO TANK (R) 4/1/2019 (AM) TWO PROXIMAL (HOUSE) TRENCHES COMPLETE. (PM) LOWER DISTAL TRENCH PARTIAL INSTALL - TRACK LOADER BROKE. (PM) MOST OF TRENCH COMPLETE. REINSP. TRENCH AND DBOX. (R) 4/2/2019 TRENCHES COMPLETE. OK TO BACKFILL. LEVELED D BOX W/ SPEED LEVELS. OK TO BACKFILL (R)

FINAL INSPECTOR [signature] DATE OF APPROVAL 04/02/2019

NOTES:
1) FOUNDATION AND FOOTINGS ARE IN PLACE AS SHOWN HEREON.
2) BUILDING TIES ARE ±0.5' UNLESS OTHERWISE NOTED.
3) TOP OF WALL = 606.70

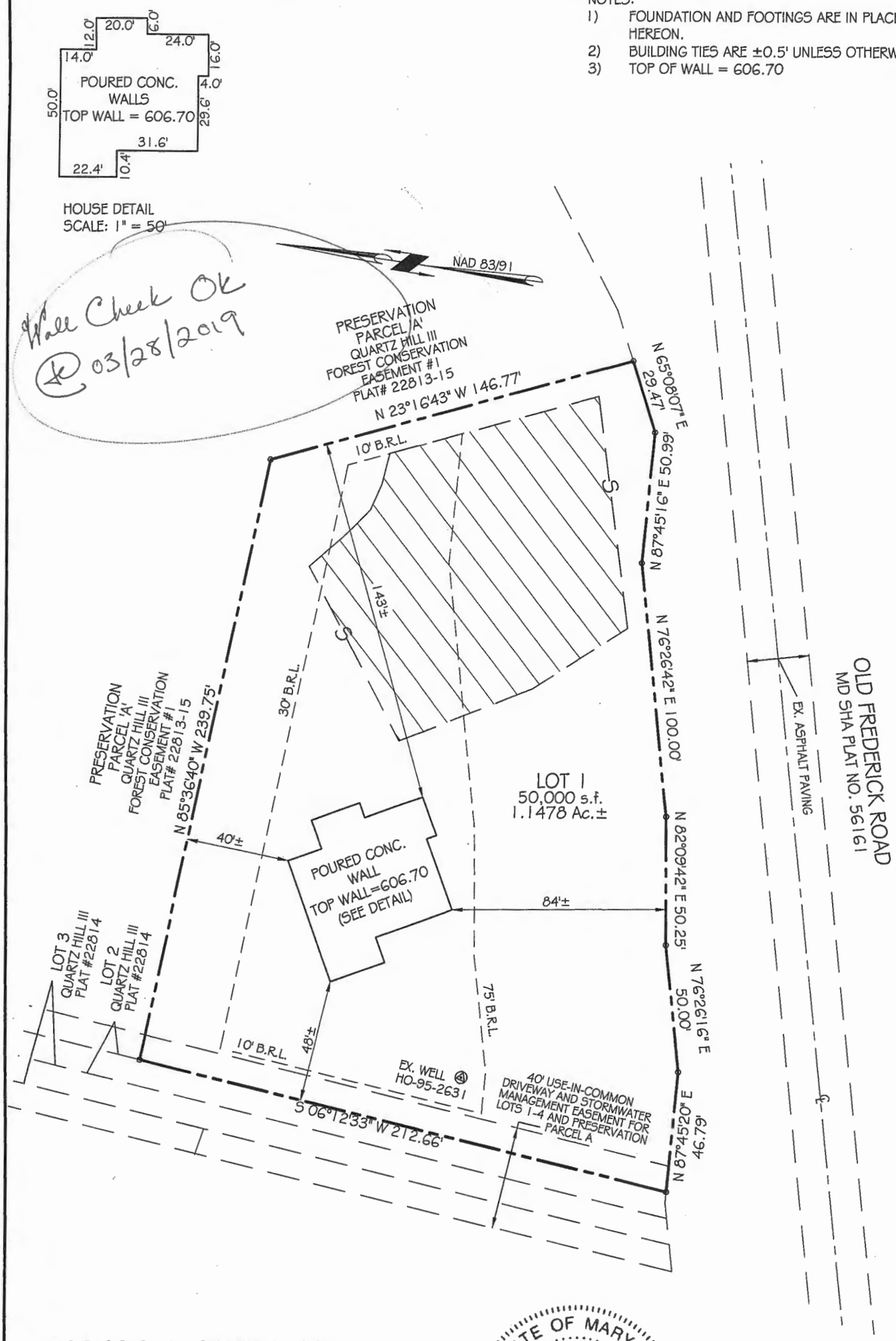

PROFESSIONAL CERTIFICATION:

I HEREBY CERTIFY THAT THESE DOCUMENTS WERE PREPARED BY ME OR UNDER MY RESPONSIBLE CHARGE, AND THAT I AM A DULY LICENSED PROFESSIONAL LAND SURVEYOR UNDER THE LAWS OF THE STATE OF MARYLAND, LICENSE NO. 21512, EXPIRATION DATE AUGUST 4, 2019 IN ACCORDANCE WITH COMAR 09.13.06.12

STATE OF MARYLAND
JEFFERY WAYNE ELKINS
No. 21512
PROFESSIONAL LAND SURVEYOR

Jeffery W. Elkins 3/21/2019
For VanMar Associates, Inc. Date
Jeffery W. Elkins, Prof. Land Surveyor

WALL CHECK DRAWING
LOT 1
QUARTZ HILL
PLAT No. 22814
14510 OLD FREDERICK ROAD
FOURTH ELECTION DISTRICT
HOWARD COUNTY, MARYLAND
SCALE: 1" = 50' MARCH, 2019

I CERTIFY THIS PLAT TO BE CORRECT; IT IS THE RESULT OF AN ACTUAL FIELD SURVEY, BASED ON DATA FOUND AMONG THE LAND RECORDS OF HOWARD COUNTY, MARYLAND, AS REFERENCED HEREON.

REFERENCE	JOB NO.
PLAT NO. 22814	B6-5595

VANMAR ASSOCIATES, INC.
Engineers Surveyors Planners
310 South Main Street Mount Airy, Maryland 21771
(301) 829-2890 (301) 831-5015 (410) 549-2751
vanmar.com

©Copyright, Latest Date Shown

Q:\AutoDesk\Jobs\B6-5595 Quartz Hill\dwg\Lot 1.dwg, 3/21/2019 9:24:29 AM, 1:1

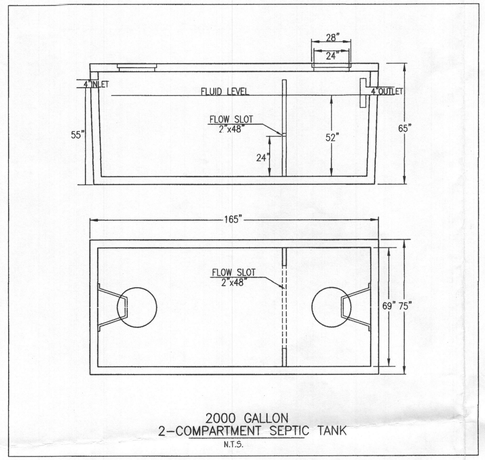

2000 GALLON
2-COMPARTMENT SEPTIC TANK
N.T.S.

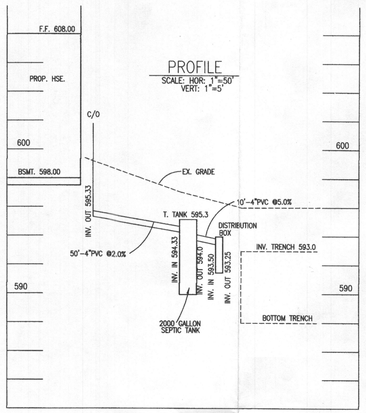

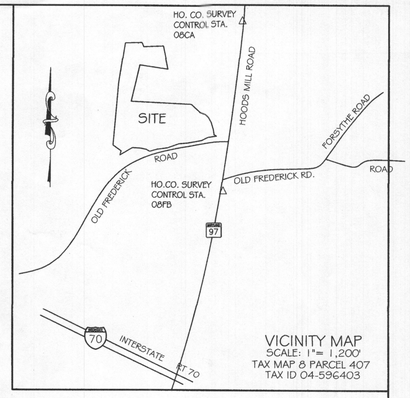

GENERAL NOTES:

1. TOPOGRAPHY & PLANIMETRIC FEATURES SHOWN HEREON TAKEN FROM COPYRIGHTED GIS DATA FROM HOWARD COUNTY, SUPPLEMENTED WITH FIELD LOCATIONS BY VANMAR ASSOCIATES, INC. CONTOUR INTERVAL IS 2 FEET. VERTICAL DATUM IS NAVD88.
2. THE EXISTING WELLS SHOWN ON THIS PLAN HAVE BEEN FIELD LOCATED BY VANMAR ASSOCIATES OR TAKEN FROM AVAILABLE RECORDS AND ACCURATELY SHOWN.
3. ZONING DISTRICT: RC-DEO
4. LIMIT OF DISTURBANCE (LOD) = 19,700 SQ.FT.
5. THERE ARE NO STREAMS, PONDS, FLOODPLAINS OR WETLANDS ON THIS LOT.
6. STORM WATER MANAGEMENT FOR THIS LOT IS PROVIDED BY N-1 ROOFTOP DISCONNECTION, N-2 NON-ROOFTOP DISCONNECTION AND M-3 LANDSCAPE INFILTRATION.

SEPTIC SYSTEM TRENCH DESIGN

INITIAL NUMBER OF BEDROOMS = 5
APPLICATION RATE = 0.6 GPD / sq.ft.
DESIGN FLOW: 150 GPD X 5 BEDROOMS = 750 GPD
750 GPD / 0.6 GPD/sq.ft. = 1250 sq.ft.
1250 sq.ft. / 3 ft. WIDE TRENCH = 417 LF TRENCH
417 LF TRENCH X 0.50 REDUCTION CREDIT = 209 LF TRENCH
TRENCH T1-1 EX. GRD=596.0 -INV. TRENCH=593.0 -B. TRENCH=588.0
TRENCH T1-2 EX. GRD=596.0 -INV. TRENCH=593.0 -B. TRENCH=588.0
TRENCH T1-3 EX. GRD=594.0 -INV. TRENCH=591.0 -B. TRENCH=586.0
TRENCH T1-4 EX. GRD=594.0 -INV. TRENCH=591.0 -B. TRENCH=586.0

1st REPLACEMENT
APPLICATION RATE = 0.8 GPD / sq.ft.
DESIGN FLOW: 150 GPD X 5 BEDROOMS = 750 GPD
750 GPD / 0.8 GPD/sq.ft. = 937.5 sq.ft.
937.5 sq.ft. / 3 ft. WIDE TRENCH = 312.5 LF TRENCH
312.5 LF TRENCH X 0.50 REDUCTION CREDIT = 156.25 LF TRENCH
TRENCH T2-1 EX. GRD=592.5 -INV. TRENCH=590.5 -B. TRENCH=584.5
TRENCH T2-2 EX. GRD=592.5 -INV. TRENCH=590.5 -B. TRENCH=584.5
TRENCH T2-3 EX. GRD=590.5 -INV. TRENCH=588.5 -B. TRENCH=582.5
TRENCH T2-4 EX. GRD=590.5 -INV. TRENCH=588.5 -B. TRENCH=582.5

2nd REPLACEMENT
APPLICATION RATE = 0.8 GPD / sq.ft.
DESIGN FLOW: 150 GPD X 5 BEDROOMS = 750 GPD
750 GPD / 0.8 GPD/sq.ft. = 937.5 sq.ft.
937.5 sq.ft. / 3 ft. WIDE TRENCH = 312.5 LF TRENCH
312.5 LF TRENCH X 0.50 REDUCTION CREDIT = 156.25 LF TRENCH
TRENCH T3-1 EX. GRD=588.7 -INV. TRENCH=586.7 -B. TRENCH=580.7
TRENCH T3-2 EX. GRD=588.7 -INV. TRENCH=586.7 -B. TRENCH=580.7
TRENCH T3-3 EX. GRD=587.3 -INV. TRENCH=585.3 -B. TRENCH=579.3
TRENCH T3-4 EX. GRD=587.3 -INV. TRENCH=585.3 -B. TRENCH=579.3

SITE PLAN NOTES:

1. ANY CHANGE TO THE LOCATIONS OR DEPTHS TO ANY COMPONENTS MUST BE APPROVED BY THE ENGINEER AND THE HOWARD COUNTY HEALTH DEPARTMENT PRIOR TO INSTALLATION. A REVISED SITE PLAN MAY BE REQUIRED.
2. MAXIMUM COVER OVER THE TANK IS 3 FEET. GREATER DEPTH WILL REQUIRE A HEAVY LOAD BEARING TANK.
3. ELECTRICAL WORK FOR THE INSTALLATION MUST BE PERFORMED BY A LICENSED ELECTRICIAN.
4. THE WELL (TAG #HO-95-2631) HAS BEEN FIELD LOCATED AND IS ACCURATELY SHOWN.
5. ALL WELLS AND SEPTIC SYSTEMS LOCATED WITHIN 100' OF THE PROPERTY BOUNDARIES AND 200' DOWN GRAIDENT OF ANY WELLS AND OR SEPTIC SYSTEMS HAVE BEEN SHOWN.

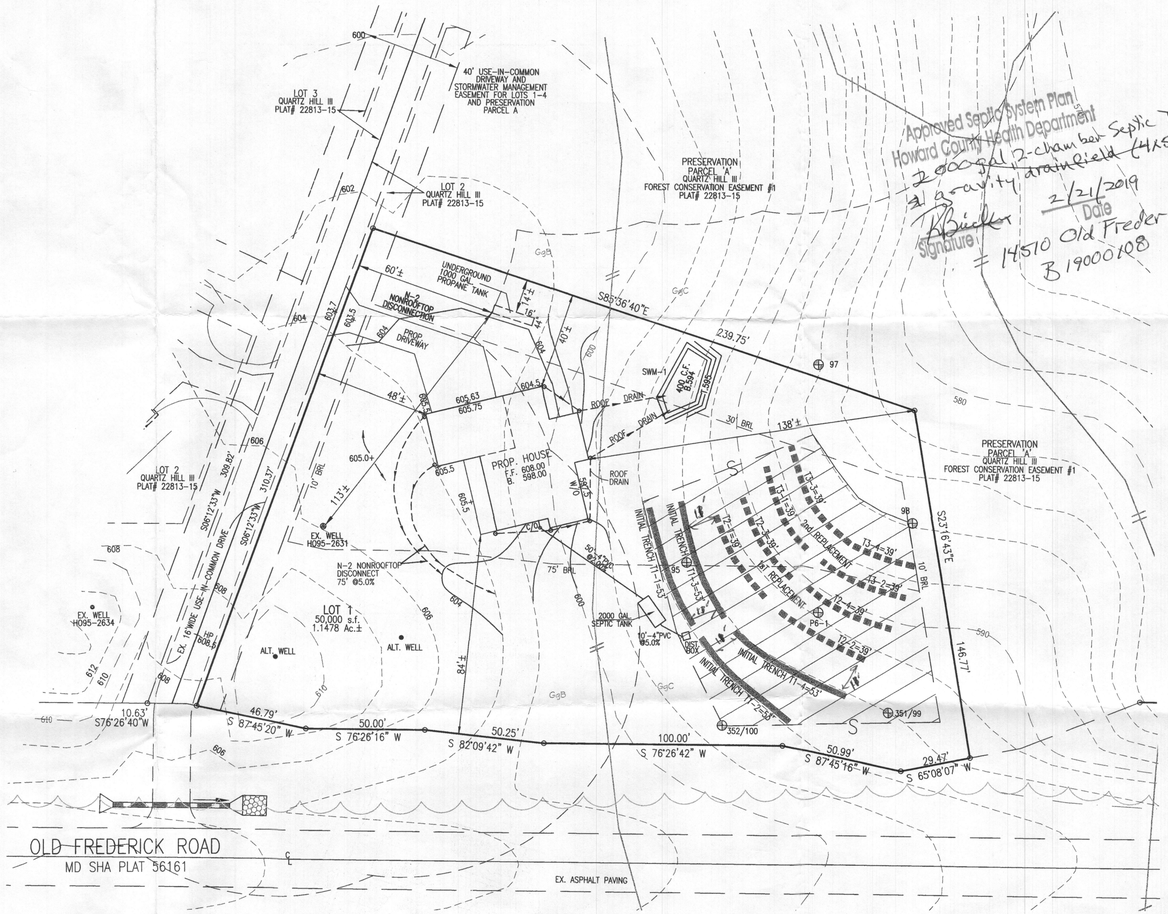

Approved Septic System Plan
Howard County Health Department
2,000 gal 2-chamber Septic Tank
21 gravity trenchfield (4x53')
R Bucher 2/21/2019
Signature Date
14510 Old Frederick Rd.
B19000108

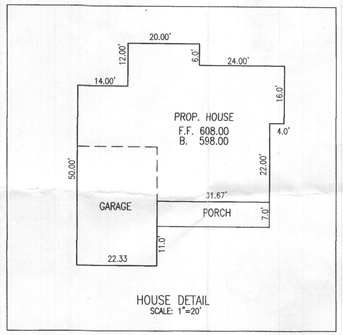

HOUSE DETAIL
SCALE: 1"=20'

PROFESSIONAL CERTIFICATION
I hereby certify that these documents were prepared or approved by me, and that I am a duly licenced professional engineer under the laws of the State of Maryland, License No. 18417, Expiration Date: 9-18-19.

DATE	REVISIONS
2/18/19	HoCo 4th Comment

STATE OF MARYLAND
RICHARD BUCHER
No. 18417
PROFESSIONAL ENGINEER
2/18/2019

OWNER / DEVELOPER:
CATONSVILLE HOMES
11175 STRATFIELD CT.
MARRIOTTSVILLE, MD. 21104
410-442-2211

ON SITE SEWAGE DISPOSAL SYSTEM DESIGN PLAN
14510 OLD FREDERICK ROAD
LOT 1

QUARTZ HILL III

PLAT No. 22813-22815

14510 OLD FREDERICK ROAD
FOURTH ELECTION DISTRICT
HOWARD COUNTY, MARYLAND
SCALE: 1" = 30' DECEMBER 2018

VANMAR
ASSOCIATES, INC.
Engineers Surveyors Planners
310 South Main Street Mount Airy, Maryland 21771
(301) 829-2890 (301) 831-5015 (410) 549-2751
vanmar.com Fax (301) 831-5603 ©Copyright, Latest Date Shown

I:\AutoDesk\Jobs\96-5595 Quartz Hill\dwg\Lot 1.dwg, 2/18/2019 9:11:24 AM, 1:1